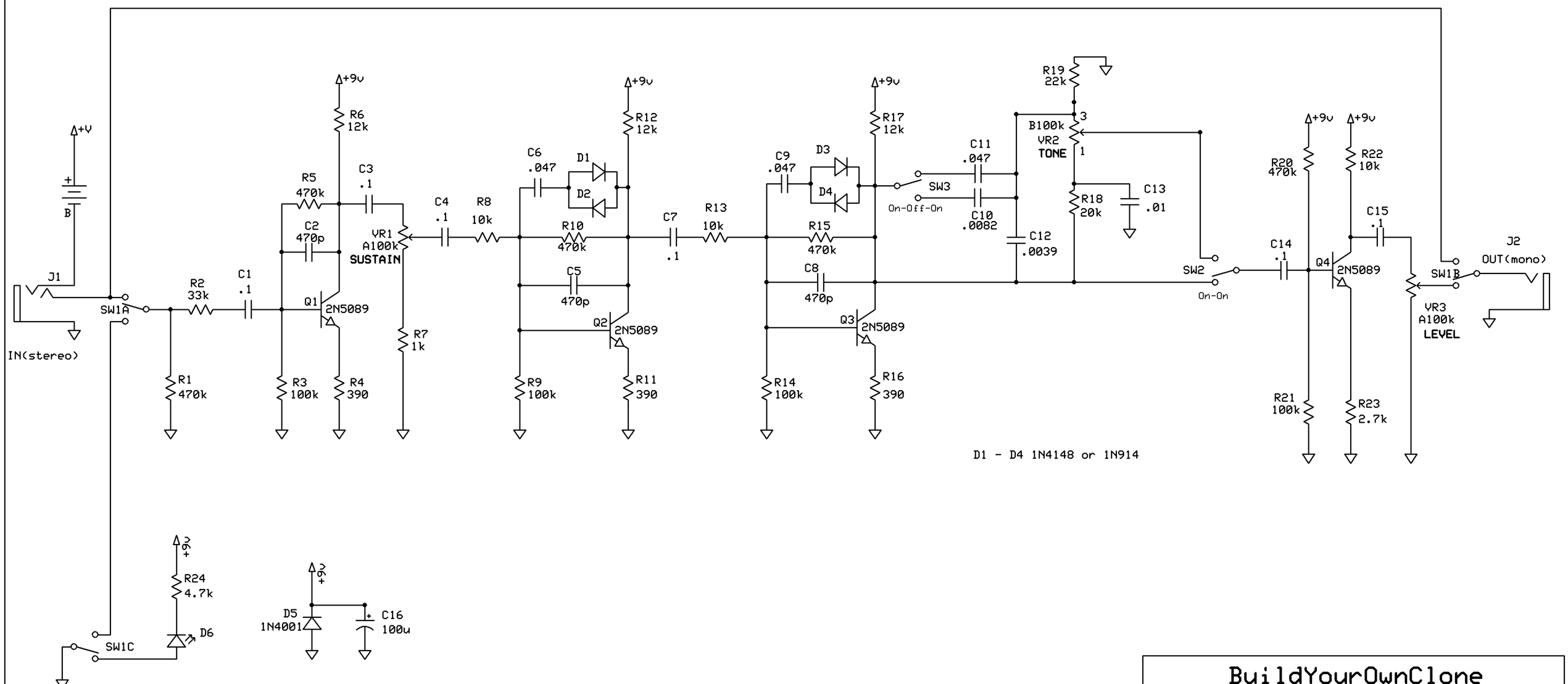

BuildYourOwnClone		
Large Beaver Russian		
N.W. Kenning	Rev 2.0 4/20/2018	© 2018