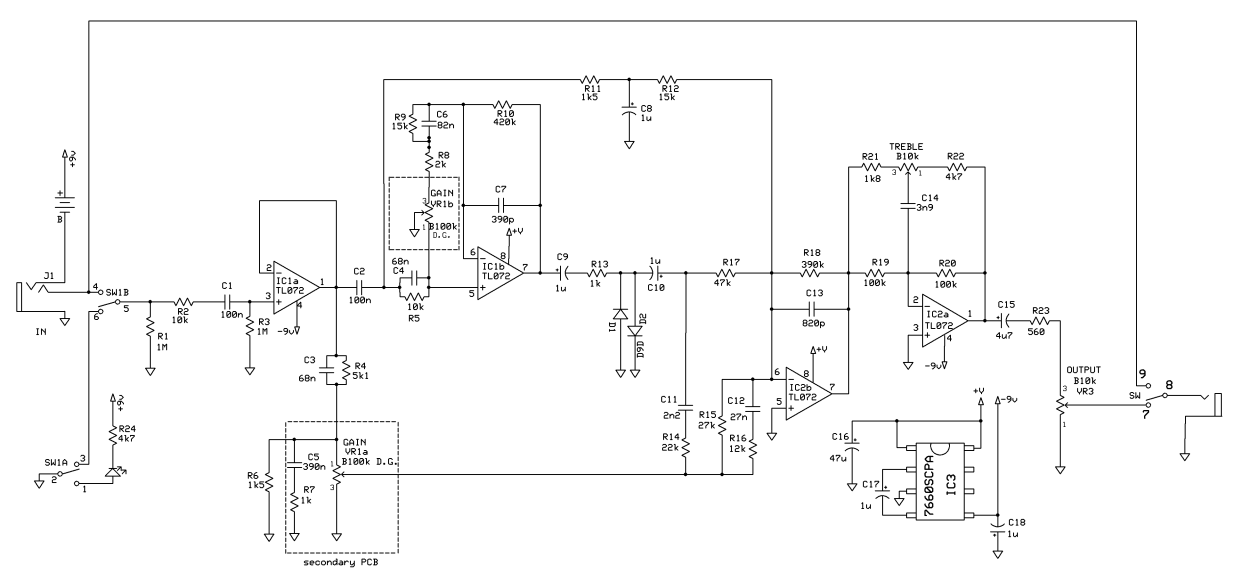

secondary PCB

Build Your Own Clone		
Li'l Pony		
Drawn By: K. Vonderhulls	Rev 1.0 3/20/2019	